"2000cc Challenge 2011/2012" Technical Regulations

1. **Introduction**:
   - **1.1.** **It should be clearly understood that if the following texts do not clearly specify that you can make a modification you should work on the principle that you cannot. Competitors are advised to seek clarifications relating to technical regulations prior to the event. Such clarification should be submitted by the Competitor in writing, and must be made to the CRC Office for the attention of the Race Director in writing. All queries will be answered in writing and all such answers will be published in Official Bulletins. Competitors should note that such advice may only be obtained from designated personnel within the CRC, and as such Competitors must seek written rulings from such members in order to minimize disputes.**
   - **1.2.** The Organizers reserve the right to carry out necessary or required changes to these regulations which are due to "force majeure", safety reasons, non-competitiveness, or if requested by the authorities, by means of BMF Approved Official Bulletins.
   - **1.3. Standard:** the word 'standard' used within these technical regulations as a description of components is to be interpreted as: - 'the specified component from the manufacturers parts list for the model / engine shown on the entry form or registration form. No modifications permitted beyond the repair or adjustment processes specifically specified by the manufacturers' workshop manual or microfiche.' Checking will be by comparison to OEM spare parts supplied by the manufacturer's official agent or by any other means necessary to ensure compliance.
   - **1.4. Standard pattern:** the words 'standard pattern' used within these technical regulations as a description of components is to be interpreted as: - 'the replacement part has the same form, shape and features as the standard part and is constructed using the same materials and manufacturing processes.
   - **1.5.** References to Sporting Regulation Articles will be by the acronym "SR". References to Technical Regulation Articles will be by the acronym "TR".
2. **General description: the "2000cc Challenge" is a national championship catered for front or rear wheel drive vehicles of the form of hatchbacks, saloons, coupés, and T-Tops/Targas (provided that conversion is made to fix roof) with engine capacity up to 2000cc and restricted to front mounted engines. Roadsters, convertibles, homologation specials, open-wheelers, monocoque shell vehicles, space frame chassis, and kit cars not permitted.**
   - **2.1.** DELETED
   - **2.2.** All vehicles must be of sound construction and mechanical condition and be well maintained.
   - **2.3.** There is no requirement for Traffic Directorate registration (road legal), or insurance.
   - **2.4.** There are no restrictions on towing or trailering of cars to/from the circuit.
   - **2.5.** Alteration of driving configuration is not permitted (i.e. switching from right hand drive to left hand drive and vice versa).
   - **2.6.** Four-wheel drive to two-wheel drive conversions are not permitted.
   - **2.7.** Cars will run in with weight limits as per TR15.1 of these regulations.
3. **Safety requirements:**
   - **3.1. Vehicle:** All Cars are required to comply with the following safety prescriptions as per Article 253 of FIA Appendix J (available from the BMF and/or CRC)
     - **3.1.1. Driver's seat:** The original driver's seat must be replaced by an FIA-homologated competition bucket seat (8855/1999 or 8862/2009 standard) with five (5) passages for the safety harness straps. The limit for use of a seat is 5 years from the date of manufacture indicated on the mandatory label. An extension of 2 further years may be authorized by the manufacturer and must be indicated by an additional label. The seat must be mounted by means of at least four (4) M8 bolts. Seat attachments homologated on a safety cage homologation extension form are authorized and recommended. The original seat mountings may be removed. The use of the competition seat mountings homologated with the bucket seat is recommended.
     - **3.1.2. Safety harness:** A safety harness equipped with a turn buckle release system and having a minimum of five (5) anchorage points, homologated by the FIA in accordance with Article 253-6 of Appendix J, is compulsory.
     - **3.1.3. Safety cage:** A safety cage complying with Article 253-8 of FIA Appendix J is compulsory. Protective padding must comply with article 253-8.3.5.
     - **3.1.4. Extinguishers:** Hand-operated extinguishers homologated in accordance with Article 253-7 of Appendix J, of a minimum capacity of four (4) liters, are compulsory. Automatic extinguishers, homologated in accordance with Article 253-7 of Appendix J, are authorized and recommended.

© COPYRIGHT 2011 - BAHRAIN CIRCUIT RACING CLUB

Extinguisher must have at least two outlets in engine compartment and two in driver's compartment. External trigger switch must be clearly marked with appropriate label. Extinguisher nozzles must be suitable for the extinguishant and be installed in such a way that they are not directly pointed at the occupants' heads.

3.1.5. Protective nets: A protective net is mandatory, and must meet the following specifications:

a) **Net:** The net must be made up of woven strips at least 19 mm (3/4") wide. The meshes must be a minimum of 25 x 25 mm and a maximum of 60x60 mm. The woven strips must be non-flammable and sewn together at each point of crossing. The net must not be of a temporary nature.

b) **Fixation:** The net must be attached to the safety cage, above the driver's window, and be affixed by means of a rapid release system, even if the car turns over. It must be possible to detach the net with one hand. To this end, the handle or lever must have colored markings (orange "dayglo"). A push button release system is authorized provided that it respects the prescriptions of this article. The push buttons must be visible from the outside, be of a contrasting color and be marked "press". For the attachment of the net or of its safety cage support, only screw-in connections are authorized. No modifications to the safety cage are authorized.

3.1.6. Central power cut-off triggered from cockpit and outside. External cut-off switch must be clearly marked with appropriate label.

3.1.7. All cars must be fitted with towing eyes/hooks (front and rear). Towing eyes must be painted Yellow, Orange or Red and if located within the vehicle periphery the location must be clearly marked.

3.2. Driver Safety:

3.2.1. Helmets: All drivers must wear crash helmets which meet one of the standards listed in technical list N° 25 of Appendix J of the FIA sporting code. Drivers are requested to consult the BMF or CRC for further clarifications.

3.2.2. Flame-resistant clothing: all drivers must wear overalls as well as gloves, long underwear, a balaclava, socks and shoes homologated to the FIA 8856-2000 standard. Users must ensure that garments are not too tight, as this reduces the level of protection. Substances which may circulate in any cooling system worn by a driver are restricted to water, or air at atmospheric pressure. Water systems must not require the saturation of a garment in order to function. Embroidery sewn directly onto the overall shall be stitched onto the outermost layer only, for better heat insulation. Backing material of badges and thread used for affixing them to the overalls must be flameproof (see Appendix 1 of the FIA 8856-2000 Standard for detailed requirements and instructions for use).

4. General technical requirement: vehicles must be of sound construction and mechanical condition and be well maintained; vehicles must pass scrutinizing checks to compete.

5. Chassis: no chassis stiffening is permitted except that derived from the fitting of the roll cage and seam welding. Extensions to the roll cage are permitted through the front bulkhead, but may not extend further forward than the centerline of the front wheels. A bolt-on strut brace may be fitted to the standard top strut mountings; if no suitable holes are available in the standard strut tower, up to 4 holes may be drilled in the inner strut tower to allow fitment or a mounting may be welded onto the inner strut tower. Rear strut braces are permitted.

6. Bodywork:

6.1. Modifications permitted:

6.1.1. General: replacement of side & rear windows with non-brittle plastic (e.g. Lexan, polycarbonate, or similar) of minimum thickness 4mm. The use of tinted glass and/or safety film is permitted on side and rear windows. In such cases it must be possible for a person situated 5 m from the car to see the driver as well as the contents of the car.

6.1.2. Interior: All interior trim may be removed. AC/Heater assembly may be removed. Driver's seat must be replaced with an FIA approved bucket seat. Standard Passenger and rear seats may be removed, but may not be utilized.. If inner door trim panels are removed, the inside of the door must be neatly covered with solid sheets. The driver's door window must remain operable by the driver whilst normally seated or, if plastic windows are fitted, must contain an aperture that enables the driver to make hand signals. Instruments may be changed or added to. An interior rear view mirror must be fitted to the right of the driver (or left if the car is right hand drive).

6.1.3. Exterior:

6.1.3.1. Fog, spot, or auxiliary lights may be removed as may any manufacturer provided 'knock-out' panels below front bumpers for the fitting of auxiliary lights and the apertures may be used for ducting. A maximum of five holes of up to 50mm diameter each or equivalent area if not circular, may be made

© COPYRIGHT 2011 - BAHRAIN CIRCUIT RACING CLUB

in the bodywork below the top line of the front bumpers and may be used for ducting. Headlights, sidelights, and indicators must remain as standard. Bonnet may be modified to include one intake/cooling duct of width of 300mm and height 100mm, the height of which must not exceed 100mm above the bonnet.

6.1.3.2. The standard wing mirror/s may be replaced by non-standard items provided each mirror has an area of at least 90 cm^2. Both driver and passenger mirrors are required.

6.1.3.3. Bonnet and rear hatch locks/latches must be removed along with any auxiliary latch; the bonnet and rear hatch must be fitted with surface mounted securing pins. The original number of windscreen wiper arms/blades must remain and be fully functioning. Tailgate wiper and mechanism must be removed. Front washer systems must be operable.

6.1.3.4. In case of T-Top or Targa, roof has to be secured permanently.

6.1.3.5. A fireproof bulkhead must be provided which may entail the blanking off of heater ducts (i.e. Interior compartment must be sealed from engine compartment).

6.1.3.6. Cut-out or cockpit cooling vent of max surface area 25cm^2.

6.1.4. Silhouette: No alterations to standard other than the raising of the rear edge of the bonnet by up to 25mm in a secure fashion.

6.1.5. Ground clearance: it is permitted to alter the ride height. Under no circumstance can any part of the bodywork, or of the suspended part of the car with the exception of the exhaust system, be below a horizontal plane passing 75mm above the ground, the car being in normal racing trim with the driver aboard. A gauge of 75mm may be used by scrutineers before or after races or qualification sessions to check the ground clearance.

6.2. Modifications prohibited:

6.2.1. General: the exterior of the car must be of standard pattern for the model being raced. Plastic front windscreen is not permitted. Any replacement body panels must be of original shape and material. Removal of material from anything other than hinged panels (i.e. doors, bonnet & hatch), and bumper carriers/support is prohibited.

6.2.2. Interior: Standard dashboard may not be removed. The trimmings situated below the dashboard and which are not parts of it may be removed. It is permitted to remove the parts of the centre console, provided that empty area(s) are neatly covered.. The instruments are free. However, the installation should not present any risk. Standard switches may be replaced by switches of different design and may be fitted at different locations on the dashboard or on the centre console. Any openings that result from this must be covered. The turn signal control must remain in its original location.

6.2.3. Exterior: Standard wheel arches are required. Non-standard spoilers (wings, side skirts, diffusers, and/or underbody aerodynamics) and splitters are prohibited. It is not permitted to increase the width of the wheel arch by the addition of material to, or the deformation of, the standard wheel internal arch. Wheel arch lips/outer edges maybe rolled (as per diagram below). Additional holes for cooling, brake ducting, air intake etc may not be made in the bodywork except as provided for in TR6.1.3.1.

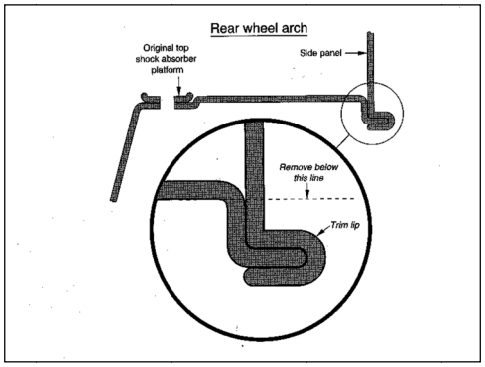

6.2.4. Ground clearance: Any in contravention of TR6.1.5

7. Engine: Piston engines only (i.e. no rotary engines). Retrofitted engines are permitted as long as they meet technical regulations below, and are from the same manufacturer as the car chassis. Scrutineers will have the right to reject any retrofit that is deemed unsafe or unsuitable.

7.1. Modifications permitted:

7.1.1. Engine capacity may be increased to the maximum permitted capacity limits of TR2.1, and subject to the remaining constraints of TR7.

7.1.2. It is permitted to reclaim engine blocks by fitting liners or by reboring up to 0.5mm oversize pistons.

7.2. Modifications prohibited:

7.2.1. Use of aftermarket blocks and heads is not allowed. All methods of forced induction is

© COPYRIGHT 2011 - BAHRAIN CIRCUIT RACING CLUB

prohibited (turbo chargers and super chargers). Use of Nitrous Oxide is prohibited.

7.2.2. Dry sumping is not permitted.

7.3. Location: the position and mounting method must conform to original model being raced.

7.4. Oil/water cooling: oil and water-cooling systems are free, provided that radiators remain within the overall periphery of the vehicle.

7.5. Induction systems: Limited to single throttle body. Manifolds are free provided manifolds fit directly to the original port faces of the cylinder head.

7.6. Exhaust systems: free, but exhaust systems must exit at the rear of the vehicle and may not pass through the driver/passenger compartment. All vehicles must be equipped with a complete manifold back exhaust system, through pipes permitted.

8. Suspension:

8.1. Permitted modifications: it is permitted to alter the ride height within the constraints of TR6.1.5. Springs and dampers are free, provided they utilize the standard pick-up points on the chassis. Separate springs and dampers may be replaced by coil-over dampers using the standard damper mountings. Adjustable spring platforms are permitted. Non-standard anti-roll bars are permitted. Offset and/or adjustable suspension strut mounts are permitted provided they utilize the standard mounting points on the body shell. Suspension bushes are free. Rear suspension axle or beam may be modified but the type of suspension and chassis pick-up points may not be changed.

8.2. Prohibited modifications: no modifications are permitted to the suspension pick-up points. Cockpit adjustable anti-roll bars are not permitted. Shock absorbers utilizing an external/remote reservoir, or similar functioning setups, are not permitted. Wishbone and rear suspension arms must be standard (except where required for camber adjustments) and mount to standard pickup points.

8.3. Wheelbase/track: the wheelbase must be ± 5% of standard for the model being raced. No restriction to the track, subject to the limitations of TR6.2.3

9. Transmissions: the transmission configuration must remain standard for the vehicle e.g. front engine & rear wheel drive, front engine & drive etc; the engine and transmission must remain in the same position relative to each other as the manufacturer's original specification. Four-wheel drive not permitted. Driveshafts may be from any variation of the manufacturer of the car being raced. Sequential transmission and dog boxes (and their variants) not allowed. Hubs must remain standard to the model of the car being raced. Automatic transmission permitted (steering mounted shifts not allowed).

9.1. Permitted modifications: The fitting of a limited slip differential is permitted. Clutch is free of restrictions.

9.2. Prohibited modifications: drive arrangement must remain standard for the model being raced (e.g. if originally front wheel drive, then must remain so). Gearbox internals, casing, bell housing and tail shaft (if applicable) must be from same chassis/engine manufacturer. Final drive housing (if applicable) must be from same chassis/engine manufacturer. The use of any electronic traction control, electronic torque biasing system or electronic/electro hydraulic adjustment of the differential is prohibited. In case of retro-fitted engine, gearbox must be of same manufacturer of the car being raced.

9.3. Transmissions & drive ratios: no restrictions on gear ratios and on final drive ratios; the corresponding gear sets must be of standard pattern and/or from same chassis/engine manufacturer. The use of any electronic traction control, electronic torque biasing system or electronic/electro hydraulic adjustment of the differential is prohibited.

10. Electrics: wiring harness is free. Electrical cutoff system to be retro-fitted if not already present.

10.1. Exterior lighting: stop lights, indicators and headlights, either full or dip beam, must work and be clearly visible to other competitors. Lights must be taped for added safety.

10.2. Batteries: no restrictions on type or position. If placed in cockpit, battery must be in an enclosed box that is made of non-conductive material. A battery and electric starter motor must be fitted and be capable of repetitive starts. The make and capacity of the battery(ies) are free.

10.3. Should the battery be moved from its original position, it must be attached to the body using a metal seat and two metal clamps with an insulating covering, fixed to the floor by bolts and nuts. For attaching these clamps, bolts with a diameter of at least 10 mm must be used, and under each bolt, a counterplate at least 3 mm thick and with a surface of at least 20 cm² beneath the metal of the bodywork. The battery must be covered by a leak-proof plastic box, attached independently of the battery. Its location is free; however, if in the cockpit it will only be possible behind the front seats. In this case, the protection box must include an air intake with its exit outside the cockpit (see diagrams below)

10.4. Generators: a fully working alternator/generator must be fitted and electrically connected so that the standard battery charging function is providing a charge to the onboard battery.

11. Brakes

11.1. Permitted modifications: No restrictions, other than in 11.2. Brake bias may be adjustable by the driver. Free choice of material for brake pads.

© COPYRIGHT 2011 - BAHRAIN CIRCUIT RACING CLUB

11.2. Prohibited modifications:

11.2.1. The maximum number of pistons per wheel is four (4)

11.2.2. The maximum diameter of the brake disc is 315 mm.

11.2.3. The brake discs must be made from ferrous metallic material

11.2.4. ABS may not be utilized unless standard for the vehicle being raced.

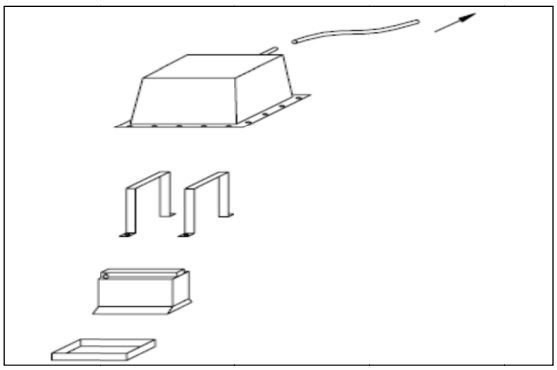

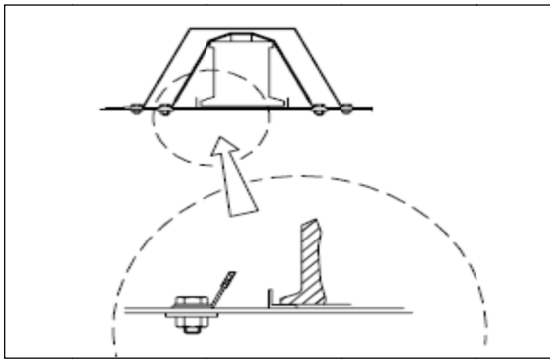

12. Steering

12.1. Permitted options: non-standard internals may be fitted to the standard steering rack housing.

12.1.1. Steering lock: if fitted with a steering lock, this must be rendered inoperative, unless the vehicle is driven to the circuit on the roads or highways.

12.2. Prohibited options: Four wheel steering is not permitted.

13. Wheels:

13.1. Permitted options: The maximum permitted diameter of the wheels (rims) is 16". The complete wheel inflated to a pressure of 2 bars must fit into a box of a diameter of 640 mm and a thickness of 245 mm. The diameters measured at the level of the inner and outer rim edges of a wheel must be identical, with a tolerance of +/- 1.5 mm. In all other respects the wheels are free provided that they are made of aluminum or ferrous compound, and that they are made in a single unit. The upper part of the complete wheel (flange + rim + tire), located vertically over the wheel hub centre, must be covered by the bodywork when measured vertically.

13.2. Prohibited options: Foam or any other system enabling the car to be driven without air in the tires is prohibited. All pressure regulations systems are prohibited. The fitting of air extractors on the wheels is prohibited.

14. Tires: The use of tire heating/heat retention devices, tire treatments, and compounds is prohibited.

14.1. Permitted options: Standard road legal DOT and E mark tires with treadwear rating of 140 or above. Competitors are advised to seek the approval of the organizer prior to acquiring tires or forego the risk of denial of entry into the round.

14.2. Prohibited options: Slicks, Street Slicks, Two-line Specials, R-Compound or similar specification tires developed for competition/track use.

14.3. Drivers are required to use ONE set of marked for TWO championship rounds (or the equivalent of 4 Races as per SR3.8).

14.4. Drivers must present the set(s) of tires to be used to Scrutineers prior to start of initial practice session. Drivers must use a set of marked tires during qualifying sessions and races.

14.5. Exceptions for replacing damaged tires will be at the discretion of Scrutineers and Race Director.

15. Vehicle weight:

15.1. The minimum weight of the car, including the driver and his full equipment:

15.1.1. 1801cc – 2000cc: 1100kg

15.1.2. 1800cc and below: 1000kg

15.2. Scrutineers will have the right to reject any added ballast that is deemed unsafe, unstable, or unsuitable.

16. Fuel Tank/Fuel

16.1. Types: a safety tank or the standard tank is permitted. If the standard fuel tank is fitted; it may not modified in any way except for the addition of foam filling. A non-return valve must be incorporated in the vent system. FT3 1999, FT3.5 or FT5 petrol tanks meeting the FIA specifications are authorized. It is recommended that the FT3 1999, FT3.5 or FT5 tank be filled with MIL-B-83054 or D-Stop type safety foam. They must be placed in the luggage compartment or in their original location. The total capacity of all the tanks may not exceed 100 liters.

16.2. Location: The connections between the filler holes and the tank ventilation holes must be shielded by a fireproof and liquid-proof protective device. If the petrol tank and/or reservoir is located in the luggage

© COPYRIGHT 2011 - BAHRAIN CIRCUIT RACING CLUB

compartment of a car with a tailgate, the tank must be shielded by a fireproof and liquidproof protective device. If the original tank is replaced with an SFI 28.1, SFI 28.2, FT3 1999, FT3.5 or FT5 tank, the new assembly must not generate an aerodynamic surface or protrude further below the vehicle than the original tank. In all cases, there must be a fireproof and liquid-proof bulkhead between the cockpit and the luggage compartment. The location of the filler holes is free, apart from in the window panels, and they must not protrude beyond the perimeter of the bodywork. If the filler hole is not used, it must be sealed. An original carbon filter in the tank air vent, as well as its control unit, may be removed. In the case of a fuel tank being fitted below the floor of the car, it must be contained in a close-fitting flameproof housing that adds no aerodynamic advantage and has no other mechanical function. This housing must include a crushable structure on all external surfaces, and be secured by using a minimum of two metal clamps 30 mm x 3 mm fixed to the floor pan by bolts and nuts. For attaching these clamps, bolts with a diameter of at least 10 mm must be used, and under each bolt a counter plate at least 3 mm thick and with a surface of at least 20 cm^2 above the metal of the floor pan. The crushable structure must be a honeycomb sandwich construction based on a fire-resistant core of a minimum crushing strength of 18N/cm^2 (25lb/in^2). It shall be permitted to pass water pipes through this core, but not fuel, lubricating oil or electrical lines. The sandwich construction must include two skins of 1.5 mm thickness having a tensile strength of minimum 225N/mm^2 (14tons/in^2). The minimum thickness of the sandwich construction must be 1 cm. The opening remaining after the removal of the original tank may be closed by the installation of a panel of the same dimensions as the fuel tank aperture.

16.3. Fuel: Pump grade gasoline or racing fuel only. Fuel must be within the density 0.69-0.76 kg/m^3 @ 15ºC. At the end of practice and the race at least 3 liters of fuel from the tank of the competing car must be available to the Scrutineers for analysis. Cars must have a method for easy access to fuel samples, as no siphoning of fuel will be allowed. Compliance with minimum weight for the car will be taken before the fuel is removed.

17. Telemetry & Two-way Communications: All forms of data and video transmission to and to and from the moving car are forbidden including two-way radio communications (including use of mobile phones). An on-board data logging system is authorized.

18. Numbers & championship decals:

18.1. Positions: race numbers must be displayed on each side of the vehicle alongside the cockpit/driver and as far forward on the front of the vehicle as possible championship/sponsors decals must be affixed prominently near all number backgrounds. Championship sponsor's decals (where applicable) must be affixed in or near the positions detailed on the diagram supplied with those decals. CRC and championship sponsor's decals must take preference to any other decals. Failure to comply will render the vehicle and driver ineligible to race.

19. Sealing Requirements:

19.1. BMF approved seals may be applied to the following components:

19.1.1. Cylinder Head to cylinder block - by external means (bolt / casting flange etc)

19.1.2. Sump pan to cylinder block – by two adjoining bolts/studs

19.1.3. Inlet manifold to cylinder head - by two adjoining bolts/studs

19.1.4. Gearbox casing/cover - by two adjoining bolts/studs

19.2. It is the Competitor's responsibility to ensure that the above detailed assemblies have bolts studs / flanges pre-drilled with 3mm holes, to enable wire seals to be affixed as and when required, that will prevent the assemblies from being dismantled.

19.3. The position of sealing holes may be rejected by scrutineers if they do not meet the required purpose and are not clearly visible during regular scrutineering checks. Competitors are to seek the advice of scrutineers for clarification.

19.4. Championship seals may be applied at any time, at the sole discretion of the Championship Scrutineer.

19.5. All applied seals must remain intact for the duration of their application period. A seal remains valid from date of application until 30 days after the last Round of the Series in which it was applied.

19.6. Should a Competitor require permission to remove a seal for maintenance purposes, it is essential that prior authorization be sought and the request is put in writing with written approval granted prior to the seal being removed. All requests to be submitted in writing to the Championship Race Director and Scrutineer. Upon approval, written confirmation of 'PERMISSION GRANTED' to remove the specified seal will be given.

19.7. BMF Seals will remain property of the BMF. Removal of official BMF seals without notification of the Race

© COPYRIGHT 2011 - BAHRAIN CIRCUIT RACING CLUB

Director and/or scrutineers will result in penalties as per series sporting regulations.

20. Judicial In-car Cameras:

20.1. Race Organizers may require cameras to be fitted in or on vehicles for use to resolve inquiries or any other judicial issue.

20.2. These cameras must be fitted to ensure a clear view forward, showing both front corners and, if possible, the steering wheel.

20.3. These cameras are additional to any cameras fitted by the driver, for private use, or the Championship Promoter. Any additional cameras must not impede the view of judicial cameras which shall have precedence.

21. Engine Change:

21.1. Competitors are allowed a single engine change during the race season effective from registration of the car and after the initial eligibility scruitineering.

21.2. Engine Refreshes are permitted provided that it's performed on the same sealed engine block and head that is presented on the vehicle during the initial scruitineering session. Any unpermitted and undisclosed engine change will result in a penalty are per series sporting regulations. An "Engine Refresh" is defined as any maintenance/repair to an engine within limits of using that same initially sealed head and block.

21.3. This rule also applies to a complete car change, and change of the make of engine at any time during the Championship.

21.4. Drivers using more than two engines during a Championship season will be penalized by a 6 point deduction penalty for the 3rd engine used, and a further 12 points if a 4th (or more) engine(s) is/are used.

© COPYRIGHT 2011 - BAHRAIN CIRCUIT RACING CLUB